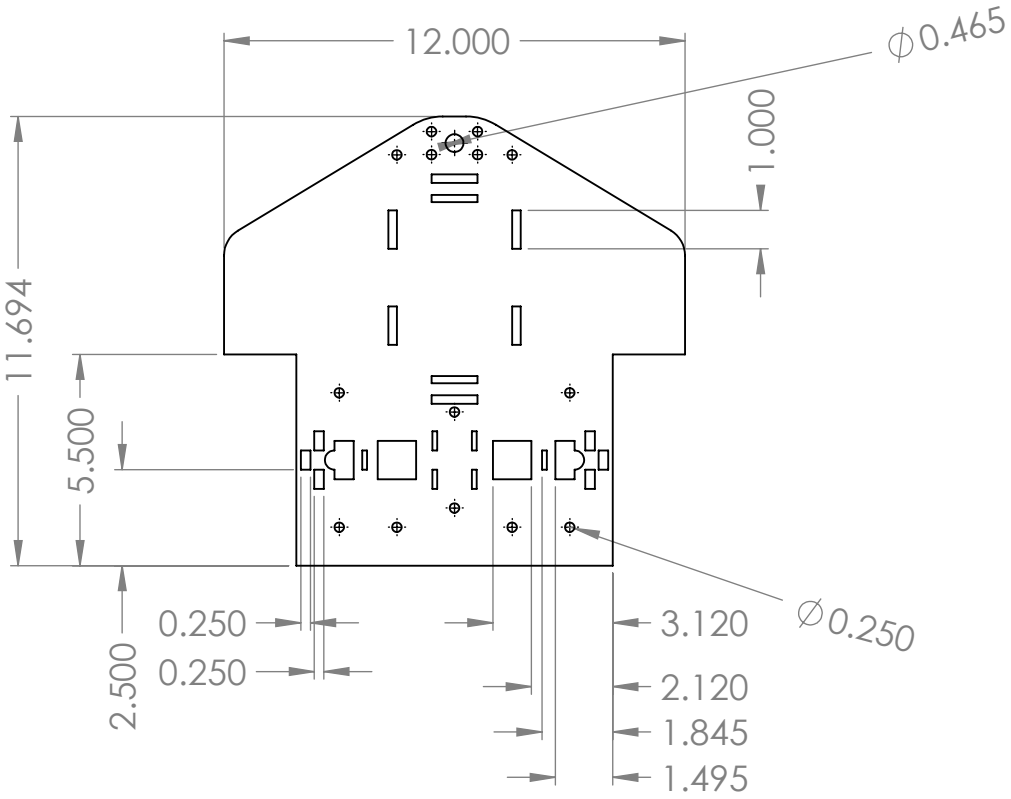

Part is symmetric and dimensions are typical. Undefined dimensions are arbitrary.

SolidWorks Student Edition.
For Academic Use Only.

UNLESS OTHERWISE SPECIFIED: DIMENSIONS ARE IN MILLIMETERS SURFACE FINISH: TOLERANCES: LINEAR: ANGULAR:	FINISH:	DEBUR AND BREAK SHARP EDGES	DO NOT SCALE DRAWING / REVISION

	NAME	SIGNATURE	DATE
DRAWN			
CHK'D			
APPV'D			
MFG			
Q.A			

TITLE: Main Base

MATERIAL: 1/4 Duron

WEIGHT:

DWG NO. PartA

A4

SCALE:1:5

SHEET 1 OF 1