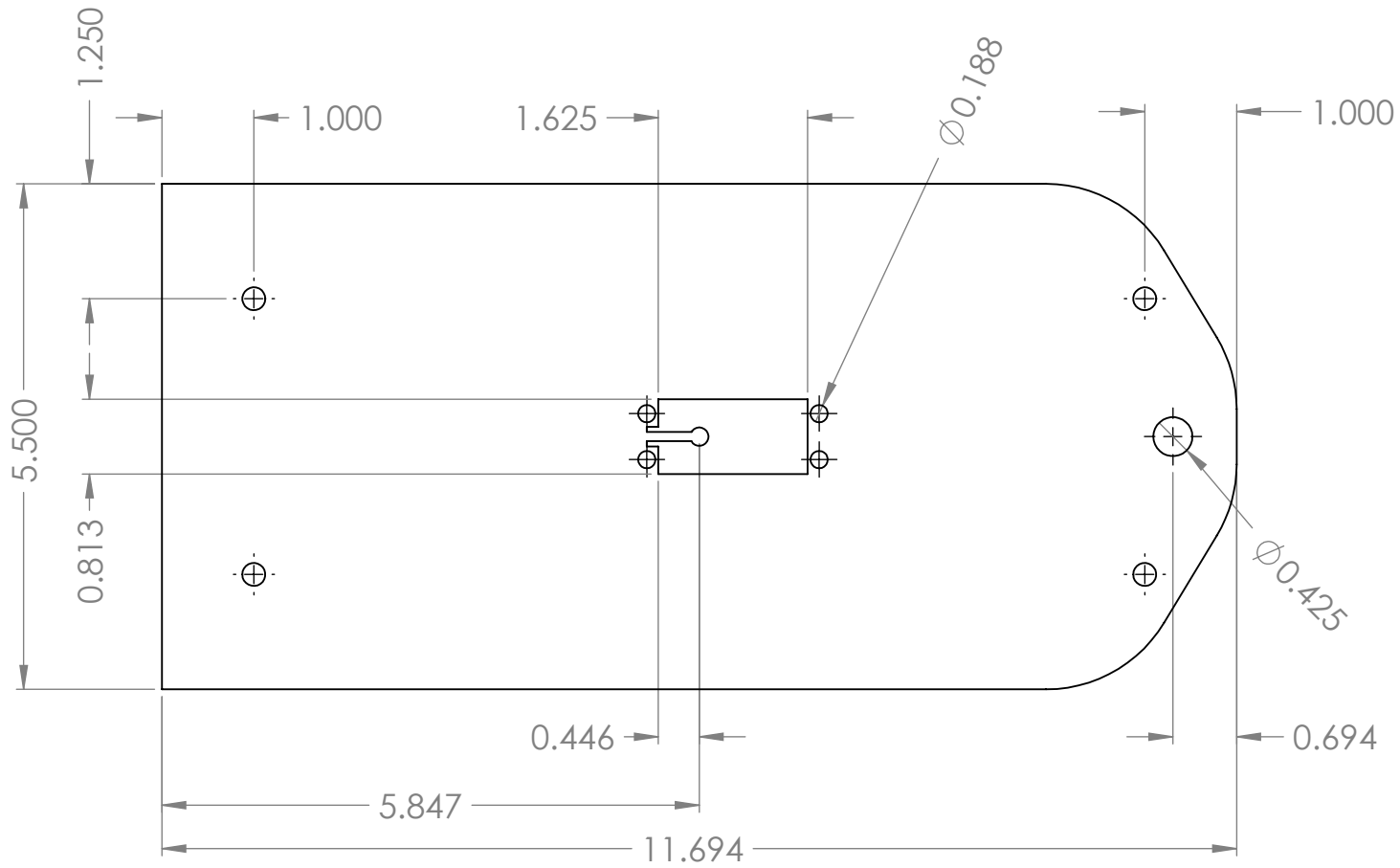

All dimensions are typical and part is symmetric.

SolidWorks Student Edition.
For Academic Use Only.

UNLESS OTHERWISE SPECIFIED: DIMENSIONS ARE IN MILLIMETERS SURFACE FINISH: TOLERANCES: LINEAR: ANGULAR:	FINISH:			DEBUR AND BREAK SHARP EDGES	DO NOT SCALE DRAWING	REVISION
					Dustin Gerrard	
	NAME	SIGNATURE	DATE		TITLE:	
DRAWN					Top Base	
CHK'D						
APPV'D						
MFG						
Q.A				MATERIAL:	DWG NO. PartE	A4
				WEIGHT:	SCALE:1:5	SHEET 1 OF 1